DIR-RH22-80

INDUSTRIAL ROBOT

HANDLING APPLICATION



FUNCTIONAL FEATURES

- The arm span is 2.2 meters. It has strong payload capacity, large working space and high flexibility.with fast running speed and high repeated positioning accuracy, it has a wide range of applications, such as loading and unloading, handling, sorting, assembly, etc.
- Equipped with safety emergency stop board which is independent of the control system, and the safety relay circuit is adopted to provide double-circuit emergency stop to ensure the reliability of emergency stop. The robot body adopts highly flexible special cable.
- Built-in three-phase filter can effectively improve the performance of EMC and EMI.
- The robot body is with ID10 dual-circuit gas pipe to meet the handling demand.
- The single cantilever structure is adopted to reduce the terminal weight and improve its flexibility.
- The selectivity range of manipulators, tools and workpiece shapes is expanded.
- Built-in cables and gas pipe. The hollow part is set at the center of the forearm and wrist.
- The cables and gas pipe are built in from the base of the robot to the end of the wrist, which is more convenient for users and improves work efficiency.
- High expansibility, multiple user bracket installation platforms are set on the robot body, which is convenient for users to fix cables and related auxiliary tools.

ROBOT BODY TECHNICAL PARAMETERS

Model		DIR-RH22-80
Arm form		Vertical multiple joints
Degree of freedom		6 axis
Maximum payload		80KG
Repeated positioning accuracy		±0.08mm
Maximum reaching distance		2200mm
Robot body weight		720KG
Installation mode		Ground
Maximum travel	axis 1	180°~180°
	axis 2	-75°~160°
	axis 3	-80°~165°
	axis 4	-170°~170°(with mechanical limits) -360°~360° (without mechanical limits)
	axis 5	-35°~215°
	axis 6	-360°~360°
Maximum speed	axis 1	130°/S
	axis 2	125°/S
	axis 3	124°/S
	axis 4	224°/S
	axis 5	190°/S
	axis 6	285°/S
Allowable torque	axis 4	328N.m
	axis 5	328N.m
	axis 6	198N.m
Allowable moment of inertia	axis 4	35.06kg.m²
	axis 5	35.06kg.m²
	axis 6	15.38kg.m²
Installation environment	ambient temperature	0~45°C
	relative humidity	20~85％ (No condensation)
	vibration	Under 0.5 G
	Others	Robot installation must be away from: Flammable or corrosive liquids or gases, electrical sources of interference
IP level		Body IP54 , wrist IP67
Advantage features		Compact structure, high speed, high precision, high expansibility and easy operation
Application		cutting, assembly, handling, marking, grinding



INSTALLATION INTERFACE DIAGRAM

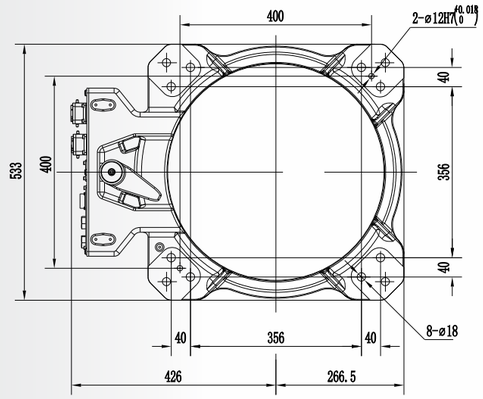

Installation Dimension of Base

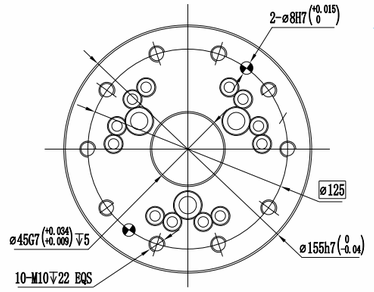

Flange Dimensions

MOTION RANGE DIAGRAM

