DIR-RH14-10

INDUSTRIAL ROBOT

HANDLING APPLICATION



FUNCTIONAL FEATURES

- The safety emergency stop board independent of the control system is equipped with, and imported forced disconnection relay is adopted to provide double-circuit emergency stop to ensure the reliability of emergency stop.
- Built-in three-phase transformer makes 380V and 220V isolated to help the power supply more stable. Built-in three-phase filter can effectively isolate external interference and prevent internal interference output.
- The robot body adopts highly flexible special cable.
- The robot body is with dual-circuit gas pipe to meet the handling demand.
- For handling applications, the robot body structure has been optimized and the rigidity is stronger.

ROBOT BODY TECHNICAL PARAMETERS

Model		DIR-RH14-10
Arm form		Vertical multiple joints
Degree of freedom		6 axis
Maximum payload		10KG
Repeated positioning accuracy		±0.08mm
Maximum reaching distance		1454mm
Robot body weight		170KG
Installation mode		Ground, upside down mounting, wall mounting
Maximum travel	axis 1	Ground/upside down mounting-167°~167°, wall mounting -30°~30°
	axis 2	-155°~90°
	axis 3	-175°~240°
	axis 4	-190°~190°
	axis 5	-105°~130°
	axis 6	-210°~210°
Maximum speed	axis 1	169°/S
	axis 2	169°/S
	axis 3	169°/S
	axis 4	301°/S
	axis 5	222°/S
	axis 6	516°/S
Allowable torque	axis 4	20N.m
	axis 5	20N.m
	axis 6	20N.m
Allowable moment of inertia	axis 4	0.63kg.m²
	axis 5	0.63kg.m²
	axis 6	0.33kg.m²
Installation environment	ambient temperature	0~45°C
	relative humidity	20~80% (No condensation)
	vibration	Under 0.5 G
	Others	Robot installation must be away from: Flammable or corrosive liquids or gases, electrical sources of interference
IP level		Body IP54 , wrist IP67
Advantage features		Compact structure, high speed, high precision, high expansibility and easy operation
Application		cutting, assembly, handling, marking, grinding



INSTALLATION INTERFACE DIAGRAM

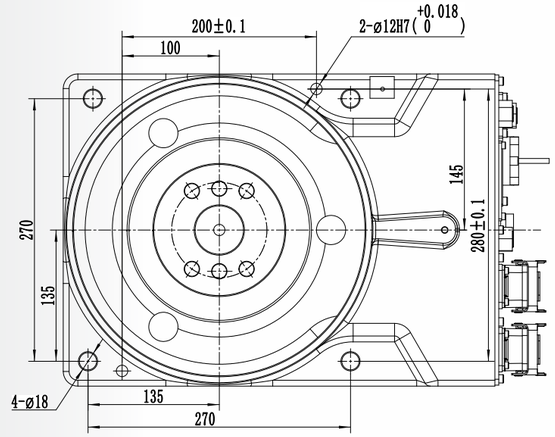

Installation Dimension of Base

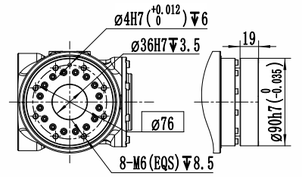

Flange Dimensions

MOTION RANGE DIAGRAM

